Chapter 12

BALANCING

Moderation is best,
and to avoid all extremes
PLUTARCH

12.0 INTRODUCTION

Any link or member that is in pure rotation can, theoretically, be perfectly balanced to eliminate all shaking forces and shaking moments. It is accepted design practice to balance all rotating members in a machine unless shaking forces are desired (as in a vibrating shaker mechanism, for example). A rotating member can be balanced either statically or dynamically. Static balance is a subset of dynamic balance. To achieve complete balance requires that dynamic balancing be done. In some cases, static balancing can be an acceptable substitute for dynamic balancing and is generally easier to do.

Rotating parts can, and generally should, be designed to be inherently balanced by their geometry. However, the vagaries of production tolerances guarantee that there will still be some small unbalance in each part. Thus a balancing procedure will have to be applied to each part after manufacture. The amount and location of any imbalance can be measured quite accurately and compensated for by adding or removing material in the correct locations.

In this chapter we will investigate the mathematics of determining and designing a state of static and dynamic balance in rotating elements and also in mechanisms having complex motion, such as the fourbar linkage. The methods and equipment used to mea-

sure and correct imbalance in manufactured assemblies will also be discussed. It is quite convenient to use the method of d' Alembert (see Section 10.12, p. 513) when discussing rotating imbalance, applying inertia forces to the rotating elements, so we will do that.

12.1 STATIC BALANCE

Despite its name, **static balance** *does* apply to things in motion. The unbalanced forces of concern are due to the accelerations of masses in the system. The requirement for **static balance** is simply that *the sum of all forces on the moving system (including d'Alembert inertial forces) must be zero.*

$$\sum \mathbf{F} - m\mathbf{a} = 0 \tag{12.1}$$

This, of course, is simply a restatement of Newton's law as discussed in Section 10.1 (p. 491).

Another name for static balance is **single-plane balance,** which means that *the masses which are generating the inertia forces are in, or nearly in, the same plane.* It is essentially a two-dimensional problem. Some examples of common devices which meet this criterion, and thus can successfully be statically balanced, are: a single gear or pulley on a shaft, a bicycle or motorcycle tire and wheel, a thin flywheel, an airplane propeller, an individual turbine blade-wheel (but not the entire turbine). The common denominator among these devices is that they are all short in the axial direction compared to the radial direction, and thus can be considered to exist in a single plane. An automobile tire and wheel is only marginally suited to static balancing as it is reasonably thick in the axial direction compared to its diameter. Despite this fact, auto tires are sometimes statically balanced. More often they are dynamically balanced and will be discussed under that topic.

Figure l2-la shows a link in the shape of a vee which is part of a linkage. We want to statically balance it. We can model this link dynamically as two point masses *ml* and *m2* concentrated at the local CGs of each "leg" of the link as shown in Figure l2-lb. These point masses each have a mass equal to that of the "leg" they replace and are supported on massless rods at the position (R_1 or R2) ofthat leg's *CG.* We can solve for the required amount and location of a third "balance mass" *mb* to be added to the system at some location Rb in order to satisfy equation 12.1.

Assume that the system is rotating at some constant angular velocity 00. The accelerations of the masses will then be strictly centripetal (toward the center) , and the inertia forces will be centrifugal (away from the center) as shown in Figure 12-1. Since the system is rotating, the figure shows a "freeze-frame" image of it. The position at which we "stop the action" for the purpose of drawing the picture and doing the calculations is both arbitrary and irrelevant to the computation. We will set up a coordinate system with its origin at the center of rotation and resolve the inertial forces into components in that system. Writing vector equation 12.1 for this system we get:

$$-m_1\mathbf{R_1}\omega^2 - m_2\mathbf{R_2}\omega^2 - m_b\mathbf{R_b}\omega^2 = 0 \tag{12.2a}$$

Note that the only forces acting on this system are the inertia forces. For balancing, it does not matter what external forces may be acting on the system. External forces cannot be balanced by making any changes to the system's internal geometry. Note that the r02 terms cancel. For balancing, it also does not matter how fast the system is rotat-

ing, only that it *is* rotating. (*The* ω *will determine the magnitudes of these forces, but we are going to force their sum to be zero anyway.*)

Dividing out

$$m_b\mathbf{R_b} = -m_1\mathbf{R_1} - m_2\mathbf{R_2} \tag{12.2b}$$

Breaking into x and y components:

$$\begin{aligned} m_b R_{b_x} &= -\left(m_1 R_{1_x} + m_2 R_{2_x}\right) \\ m_b R_{b_y} &= -\left(m_1 R_{1_y} + m_2 R_{2_y}\right) \end{aligned} \tag{12.2c}$$

The terms on the right sides are known. We can readily solve for the mR_x and mR_y products needed to balance the system. It will be convenient to convert the results to polar coordinates.

$$\begin{aligned} \theta_b &= \arctan\frac{m_b R_{b_y}}{m_b R_{b_x}} \\ &= \arctan\frac{-\left(m_1 R_{1_y} + m_2 R_{2_y}\right)}{-\left(m_1 R_{1_x} + m_2 R_{2_x}\right)} \end{aligned} \tag{12.2d}$$

$$\begin{aligned} R_b &= \sqrt{\left(R_{b_x}{}^2 + R_{b_y}{}^2\right)} \\ m_b R_b &= m_b\sqrt{\left(R_{b_x}{}^2 + R_{b_y}{}^2\right)} \\ &= \sqrt{m_b{}^2\left(R_{b_x}{}^2 + R_{b_y}{}^2\right)} \\ &= \sqrt{m_b{}^2 R_{b_x}{}^2 + m_b{}^2 R_{b_y}{}^2} \\ &= \sqrt{\left(m_b R_{b_x}\right)^2 + \left(m_b R_{b_y}\right)^2} \end{aligned} \tag{12.2e}$$

The angle at which the balance mass must be placed (with respect to our arbitrarily oriented freeze-frame coordinate system) is θ_b, found from equation 12.2d. Note that the signs of the numerator and denominator of equation 12.2d must be individually maintained and a two-argument arctangent computed in order to obtain θ_b in the correct quadrant. Most calculators and computers will give an arctangent result only between ±90°.

The m_bR_b product is found from equation 12.2e. There is now an infinity of solutions available. We can either select a value for m_b and solve for the necessary radius R_b at which it should be placed, or choose a desired radius and solve for the mass that must be placed there. Packaging constraints may dictate the maximum radius possible in some cases. The balance mass is confined to the "single plane" of the unbalanced masses.

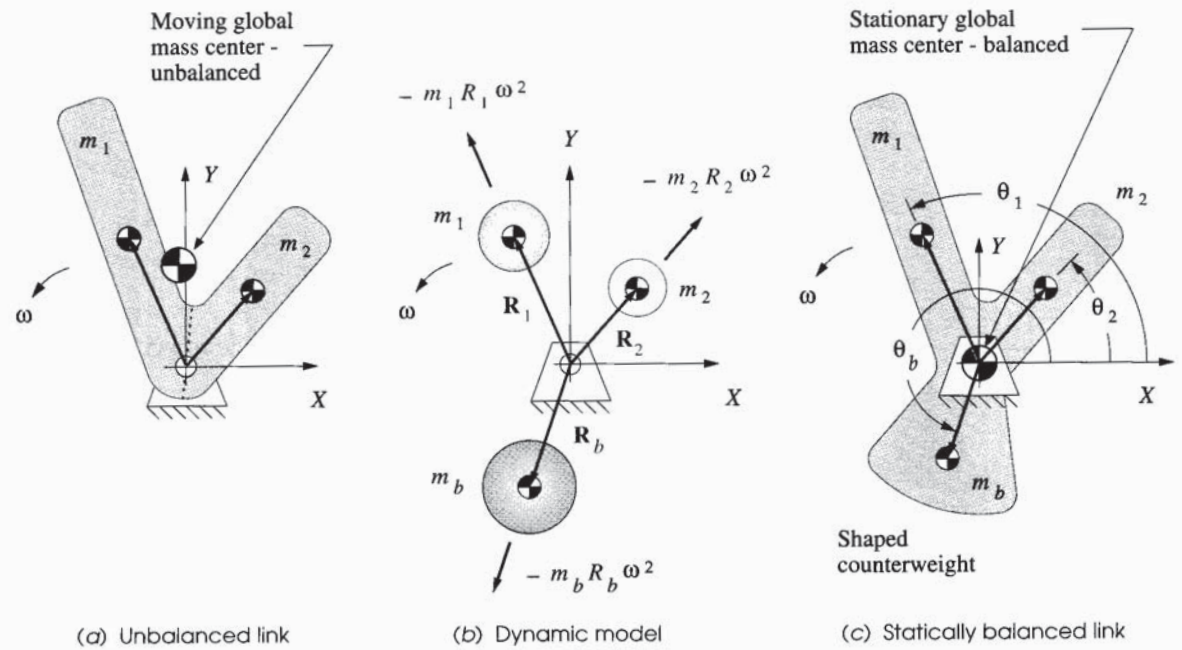

FIGURE 12-1

Static balancing a link in pure rotation

Once a combination of m_b and R_b is chosen, it remains to design the physical counterweight. The chosen radius R_b is the distance from the pivot to the *CG* of whatever shape we create for the counterweight mass. Our simple dynamic model, used to calculate the *mR* product, assumed a point mass and a massless rod. These ideal devices do not exist. A possible shape for this counterweight is shown in Figure 12-1c. Its mass must be m_b, distributed so as to place its *CG* at radius R_b at angle θ_b.

EXAMPLE 12-1

Static Balancing.

Given: The system shown in Figure 12-1 has the following data:

$m_1 = 1.2$ kg $\qquad R_1 = 1.135$ m @$\angle 113.4°$

$m_2 = 1.8$ kg $\qquad R_2 = 0.822$ m @$\angle 48.8°$

$\omega = 40$ rad/sec

Find: The mass-radius product and its angular location needed to statically balance the system.

Solution:

1 Resolve the position vectors into *xy* components in the arbitrary coordinate system associated with the freeze-frame position of the linkage chosen for analysis.

$$R_1 = 1.135 \,@\angle 113.4°; \qquad R_{1_x} = -0.451, \qquad R_{1_y} = 1.042$$
$$R_2 = 0.822 \,@\angle 48.8°; \qquad R_{2_x} = +0.541, \qquad R_{2_y} = 0.618 \tag{a}$$

2 Solve equations 12.2c.

$$m_b R_{b_x} = -m_1 R_{1_x} - m_2 R_{2_x} = -(1.2)(-0.451) - (1.8)(0.541) = -0.433$$
$$m_b R_{b_y} = -m_1 R_{1_y} - m_2 R_{2_y} = -(1.2)(1.042) - (1.8)(0.618) = -2.363 \tag{b}$$

3 Solve equations 12.2d and 12.2e.

$$\theta_b = \arctan\frac{-2.363}{-0.433} = 259.6°$$
$$m_b R_b = \sqrt{(-0.433)^2 + (-2.363)^2} = 2.402 \text{ kg-m} \tag{c}$$

4 This mass-radius product of 2.402 kg-m can be obtained with a variety of shapes appended to the assembly. Figure 12-1c shows a particular shape whose *CG* is at a radius of R_b = 0.806 m at the required angle of 259.6°. The mass required for this counterweight design is then:

$$m_b = \frac{2.402 \text{ kg-m}}{0.806 \text{ m}} = 2.980 \text{ kg} \tag{d}$$

at a chosen *CG* radius of:

$$R_b = 0.806 \text{ m} \tag{e}$$

Many other shapes are possible. As long as they provide the required mass-radius product at the required angle, the system will be statically balanced. Note that the value of ω was not needed in the calculation.

12.2 DYNAMIC BALANCE

Dynamic balance is sometimes called **two-plane balance**. It requires that two criteria be met. The sum of the forces must be zero (static balance) plus the sum of the moments* must also be zero.

$$\sum \mathbf{F} = 0$$
$$\sum \mathbf{M} = 0 \tag{12.3}$$

* We will use the term *moment* in this text to refer to "turning forces" whose vectors are perpendicular to an axis of rotation or "long axis" of an assembly, and the term *torque* to refer to "turning forces" whose vectors are parallel to an axis of rotation.

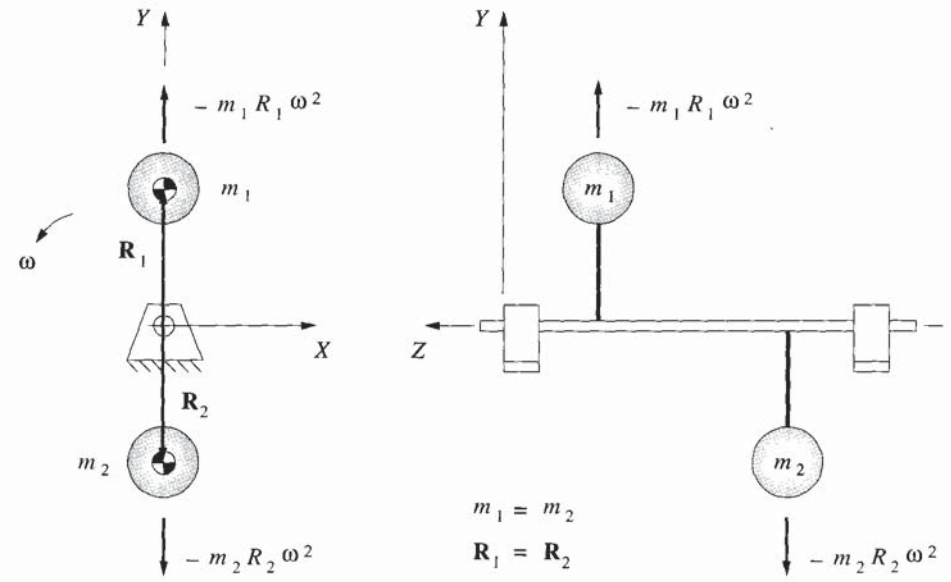

FIGURE 12-2
Balanced forces—unbalanced moment

These moments act in planes that include the axis of rotation of the assembly such as planes XZ and *YZ* in Figure 12-2. The moment's vector direction, or axis, is perpendicular to the assembly's axis of rotation.

Any rotating object or assembly which is relatively long in the axial direction compared to the radial direction requires dynamic balancing for complete balance. It is possible for an object to be statically balanced but not be dynamically balanced. Consider the assembly in Figure 12-2. TWo equal masses are at identical radii, 180° apart rotationally, but separated along the shaft length. A summation of *-ma* forces due to their rotation will be always zero. However, in the side view, their inertia forces form a couple which rotates with the masses about the shaft. This rocking couple causes a moment on the ground plane, alternately lifting and dropping the left and right ends of the shaft.

Some examples of devices which require dynamic balancing are: rollers, crankshafts, camshafts, axles, clusters of multiple gears, motor rotors, turbines, propeller shafts. The common denominator among these devices is that their mass may be unevenly distributed both rotationally around their axis and also longitudinally along their axis.

To correct dynamic imbalance requires either adding or removing the right amount of mass at the proper angular locations *in two correction planes* separated by some distance along the shaft. This will create the necessary counter forces to statically balance the system and also provide a counter couple to cancel the unbalanced moment. When an automobile tire and wheel is dynamically balanced, the two correction planes are the inner and outer edges of the wheel rim. Correction weights are added at the proper locations in each of these correction planes based on a measurement of the dynamic forces generated by the unbalanced, spinning wheel.

It is always good practice to first statically balance all individual components that go into an assembly, if possible. This will reduce the amount of dynamic imbalance that must be corrected in the final assembly and also reduce the bending moment on the shaft. A common example of this situation is the aircraft turbine which consists of a number of circular turbine wheels arranged along a shaft. Since these spin at high speed, the inertia forces due to any imbalance can be very large. The individual wheels are statically balanced before being assembled to the shaft. The final assembly is then dynamically balanced.

Some devices do not lend themselves to this approach. An electric motor rotor is essentially a spool of copper wire wrapped in a complex pattern around the shaft. The mass of the wire is not uniformly distributed either rotationally or longitudinally, so it will not be balanced. It is not possible to modify the windings' local mass distribution after the fact without compromising electrical integrity. Thus the entire rotor imbalance must be countered in the two correction planes after assembly.

Consider the system of three lumped masses arranged around and along the shaft in Figure 12-3. Assume that, for some reason, they cannot be individually statically balanced within their own planes. We then create two correction planes labeled A and B. In this design example, the unbalanced masses m_1, m_2, m_3 and their radii R_1, R_2, R_3 are known along with their angular locations θ_1, θ_2, and θ_3. We want to dynamically balance the system. A three-dimensional coordinate system is applied with the axis of rotation in the Z direction. Note that the system has again been stopped in an arbitrary freeze-frame position. Angular acceleration is assumed to be zero. The summation of forces is:

$$-m_1\mathbf{R}_1\omega^2 - m_2\mathbf{R}_2\omega^2 - m_3\mathbf{R}_3\omega^2 - m_A\mathbf{R}_A\omega^2 - m_B\mathbf{R}_B\omega^2 = 0 \tag{12.4a}$$

Dividing out the ω^2 and rearranging we get:

$$m_A\mathbf{R}_A + m_B\mathbf{R}_B = -m_1\mathbf{R}_1 - m_2\mathbf{R}_2 - m_3\mathbf{R}_3 \tag{12.4b}$$

Breaking into x and y components:

$$\begin{aligned} m_A R_{A_x} + m_B R_{B_x} &= -m_1 R_{1_x} - m_2 R_{2_x} - m_3 R_{3_x} \\ m_A R_{A_y} + m_B R_{B_y} &= -m_1 R_{1_y} - m_2 R_{2_y} - m_3 R_{3_y} \end{aligned} \tag{12.4c}$$

Equations 12.4c have four unknowns in the form of the $m\mathbf{R}$ products at plane A and the $m\mathbf{R}$ products at plane B. To solve we need the sum of the moments equation which we can take about a point in one of the correction planes such as point O. The moment arm z distances of each force measured from plane A are labeled l_1, l_2, l_3, l_B in the figure; thus

$$\left(m_B\mathbf{R}_B\omega^2\right)l_B = -\left(m_1\mathbf{R}_1\omega^2\right)l_1 - \left(m_2\mathbf{R}_2\omega^2\right)l_2 - \left(m_3\mathbf{R}_3\omega^2\right)l_3 \tag{12.4d}$$

Dividing out the ω^2, breaking into x and y components, and rearranging:

The moment in the XZ plane (i.e., about the Y axis) is:

$$m_B R_{B_x} = \frac{-\left(m_1 R_{1_x}\right)l_1 - \left(m_2 R_{2_x}\right)l_2 - \left(m_3 R_{3_x}\right)l_3}{l_B} \tag{12.4e}$$

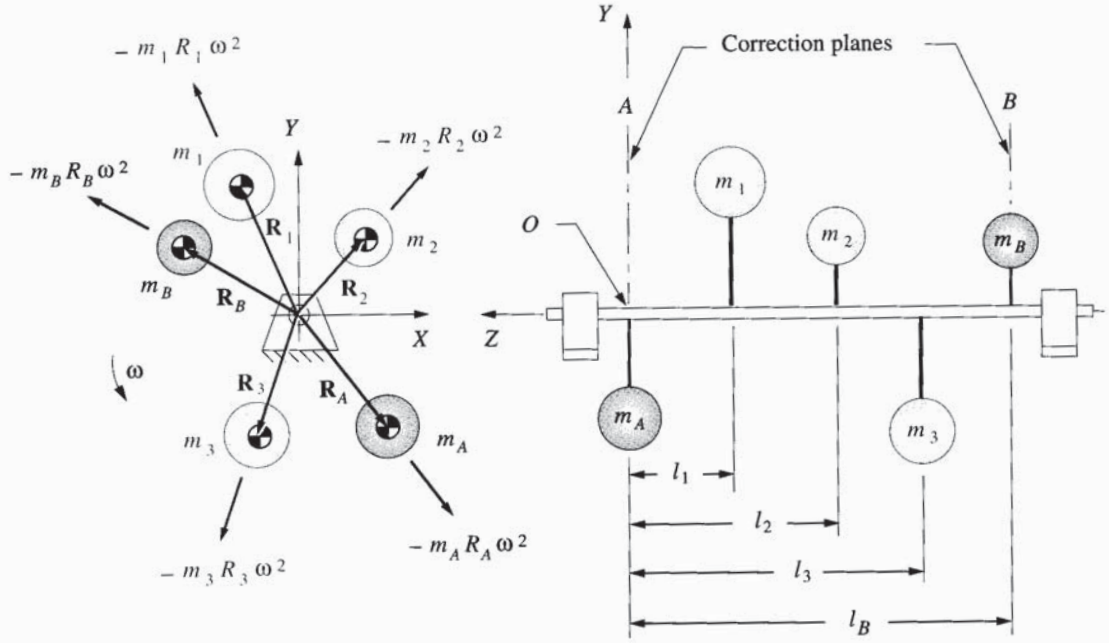

FIGURE 12-3

Two-plane dynamic balancing

The moment in the YZ plane (i.e., about the X axis) is:

$$m_BR_{B_y} = \frac{-\left(m_1R_{1_y}\right)l_1 - \left(m_2R_{2_y}\right)l_2 - \left(m_3R_{3_y}\right)l_3}{l_B} \tag{12.4f}$$

These can be solved for the $m\mathbf{R}$ products in x and y directions for correction plane B which can then be substituted into equation 12.4c to find the values needed in plane A. Equations 12.2d and 12.2e can then be applied to each correction plane to find the angles at which the balance masses must be placed and the mR products needed in each plane. The physical counterweights can then be designed consistent with the constraints outlined in the section on static balance. Note that the radii R_A and R_B do not have to be the same value.

EXAMPLE 12-2

Dynamic Balancing.

Given: The system shown in Figure 12-3 has the following data:

$m_1 = 1.2$ kg	$R_1 = 1.135$ m @$\angle 113.4°$
$m_2 = 1.8$ kg	$R_2 = 0.822$ m @$\angle 48.8°$
$m_3 = 2.4$ kg	$R_3 = 1.04$ m @$\angle 251.4°$

The z distances in meters from plane A are:

$$l_1 = 0.854, \qquad l_2 = 1.701, \qquad l_3 = 2.396, \qquad l_B = 3.097$$

Find: The mass-radius products and their angular locations needed to dynamically balance the system using the correction planes A and B.

Solution:

1 Resolve the position vectors into xy components in the arbitrary coordinate system associated with the freeze-frame position of the linkage chosen for analysis.

$$\begin{aligned} R_1 &= 1.135 \,@\, \angle 113.4°; & R_{1_x} &= -0.451, & R_{1_y} &= +1.042 \\ R_2 &= 0.822 \,@\, \angle 48.8°; & R_{2_x} &= +0.541, & R_{2_y} &= +0.618 \\ R_3 &= 1.04 \,@\, \angle 251.4°; & R_{3_x} &= -0.332, & R_{3_y} &= -0.986 \end{aligned} \tag{a}$$

2 Solve equations 12.4e for summation of moments about point O.

$$\begin{aligned} m_B R_{B_x} &= \frac{-(m_1 R_{1_x}) l_1 - (m_2 R_{2_x}) l_2 - (m_3 R_{3_x}) l_3}{l_B} \\ &= \frac{-(1.2)(-0.451)(0.854) - (1.8)(0.541)(1.701) - (2.4)(-0.332)(2.396)}{3.097} = 0.230 \end{aligned} \tag{b}$$

$$\begin{aligned} m_B R_{B_y} &= \frac{-(m_1 R_{1_y}) l_1 - (m_2 R_{2_y}) l_2 - (m_3 R_{3_y}) l_3}{l_B} \\ &= \frac{-(1.2)(1.042)(0.854) - (1.8)(0.618)(1.701) - (2.4)(-0.986)(2.396)}{3.097} = 0.874 \end{aligned} \tag{c}$$

3 Solve equations 12.2d and 12.2e for the mass radius product in plane B.

$$\begin{aligned} \theta_B &= \arctan \frac{0.874}{0.230} = 75.27° \\ m_B R_B &= \sqrt{(0.230)^2 + (0.874)^2} = 0.904 \text{ kg-m} \end{aligned} \tag{d}$$

4 Solve equations 12.4c for forces in x and y directions.

$$\begin{aligned} m_A R_{A_x} &= -m_1 R_{1_x} - m_2 R_{2_x} - m_3 R_{3_x} - m_B R_{B_x} \\ m_A R_{A_y} &= -m_1 R_{1_y} - m_2 R_{2_y} - m_3 R_{3_y} - m_B R_{B_y} \\ m_A R_{A_x} &= -(1.2)(-0.451) - 1.8(0.541) - (2.44)(-0.332) - 0.230 = 0.133 \\ m_A R_{A_y} &= -(1.2)(1.042) - (1.8)(0.618) - (2.4)(-0.986) - 0.74 = -0.72 \end{aligned} \tag{e}$$

5 Solve equations 12.2d and 12.2e for the mass radius product in plane A.

$$\theta_A = \arctan\frac{-0.872}{0.133} = -81.35°$$
$$m_A R_A = \sqrt{(0.133)^2 + (-0.872)^2} = 0.882 \text{ kg-m} \qquad (f)$$

6 These mass-radius products can be obtained with a variety of shapes appended to the assembly in planes A and B. Many shapes are possible. As long as they provide the required mass-radius products at the required angles in each correction plane, the system will be dynamically balanced.

So, when the design is still on the drawing board, these simple analysis techniques can be used to determine the necessary sizes and locations of balance masses for any assembly in pure rotation for which the mass distribution is defined. This two-plane balance method can be used to dynamically balance any system in pure rotation, and all such systems should be balanced unless the purpose of the device is to create shaking forces or moments.

12.3 BALANCING LINKAGES

Many methods have been devised to balance linkages. Some achieve a complete balance of one dynamic factor, such as shaking force, at the expense of other factors such as shaking moment or driving torque. Others seek an optimum arrangement that collectively minimizes (but does not zero) shaking forces, moments, and torques for a best compromise. Lowen and Berkof, [1] and Lowen, Tepper, and Berkof [2] give comprehensive reviews of the literature on this subject up to 1983. Additional work has been done on the problem since that time, some of which is noted in the references at the end of this chapter.

Complete balance of any mechanism can be obtained by creating a second "mirror image" mechanism connected to it so as to cancel all dynamic forces and moments. Certain configurations of multicylinder internal combustion engines do this. The pistons and cranks of some cylinders cancel the inertial effects of others. We will explore these engine mechanisms in Chapter 14. However, this approach is expensive and is only justified if the added mechanism serves some second purpose such as increasing power, as in the case of additional cylinders in an engine. Adding a "dummy" mechanism whose only purpose is to cancel dynamic effects is seldom economically justifiable.

Most practical linkage balancing schemes seek to minimize or eliminate one or more of the dynamic effects (forces, moments, torques) by redistributing the mass of the existing links. This typically involves adding counterweights and/or changing the shapes of links to relocate their CGs. More elaborate schemes add geared counterweights to some links in addition to redistributing their mass. As with any design endeavor, there are trade-offs. For example, elimination of shaking forces usually increases the shaking moment and driving torque. We can only present a few approaches to this problem in the space available. The reader is directed to the literature for information on other methods.

Complete Force Balance of Linkages

The rotating links (cranks, rockers) of a linkage can be individually balanced by the rotating balance methods described in the previous section. The effects of the couplers, which are in complex motion, are more difficult to compensate for. Note that the process of statically balancing a rotating link, in effect, forces its mass center (*CG*) to be at its fixed pivot and thus stationary. In other words the condition of **static balance** can also be **defined as** one of *making the mass center stationary*. A coupler has no fixed pivot, and thus its mass center is, in general, always in motion.

Any mechanism, no matter how complex, will have, for every instantaneous position, a single, overall, *global mass center* located at some particular point. We can calculate its location knowing only the link masses and the locations of the *CG*s of the individual links at that instant. The global mass center normally will change position as the linkage moves. If we can somehow force this global mass center to be stationary, we will have a state of static balance for the overall linkage.

The Berkof-Lowen method of linearly independent vectors[3] provides a means to calculate the magnitude and location of counterweights to be placed on the rotating links which will make the global mass center stationary for all positions of the linkage. Placement of the proper balance masses on the links will cause the dynamic forces on the fixed pivots to always be equal and opposite, i.e., a couple, thus creating static balance ($\Sigma F = 0$ but $\Sigma M \neq 0$) in the moving linkage.

This method works for any n-link planar linkage having a combination of revolute (pin) and prismatic (slider) joints, provided that there exists a path to the ground from every link which only contains revolute joints.[4] In other words, if all possible paths from any one link to the ground contain sliding joints, then the method fails. Any linkage of n links that meets the above criterion can be balanced by the addition of $n/2$ balance weights, each on a different link.[4] We will apply the method from reference [3] to a fourbar linkage.

Figure 12-4 shows a fourbar linkage with its overall global mass center located by the position vector $\mathbf{R}_t$. The individual *CG*s of the links are located *in the global system* by position vectors $\mathbf{R}_2$, $\mathbf{R}_3$, and $\mathbf{R}_4$ (magnitudes R_2, R_3, R_4), rooted at its origin, the crank pivot O_2. The link lengths are defined by position vectors labeled $\mathbf{L}_1$, $\mathbf{L}_2$, $\mathbf{L}_3$, $\mathbf{L}_4$ (magnitudes l_1, l_2, l_3, l_4), and the local position vectors which locate the *CG*s *within each link* are $\mathbf{B}_2$, $\mathbf{B}_3$, $\mathbf{B}_4$ (magnitudes b_2, b_3, b_4). The angles of the vectors $\mathbf{B}_2$, $\mathbf{B}_3$, $\mathbf{B}_4$ are ϕ_2, ϕ_3, ϕ_4 measured internal to the links with respect to the links' lines of centers $\mathbf{L}_2$, $\mathbf{L}_3$, $\mathbf{L}_4$. The instantaneous link angles which locate $\mathbf{L}_2$, $\mathbf{L}_3$, $\mathbf{L}_4$ in the global system are θ_2, θ_3, θ_4. The total mass of the system is simply the sum of the individual link masses:

$$m_t = m_2 + m_3 + m_4 \tag{12.5a}$$

The total mass moment about the origin must be equal to the sum of the mass moments due to the individual links:

$$\sum M_{O_2} = m_t \mathbf{R}_t = m_2 \mathbf{R}_2 + m_3 \mathbf{R}_3 + m_4 \mathbf{R}_4 \tag{12.5b}$$

The position of the global mass center is then:

$$\mathbf{R}_t = \frac{m_2 \mathbf{R}_2 + m_3 \mathbf{R}_3 + m_4 \mathbf{R}_4}{m_t} \tag{12.5c}$$

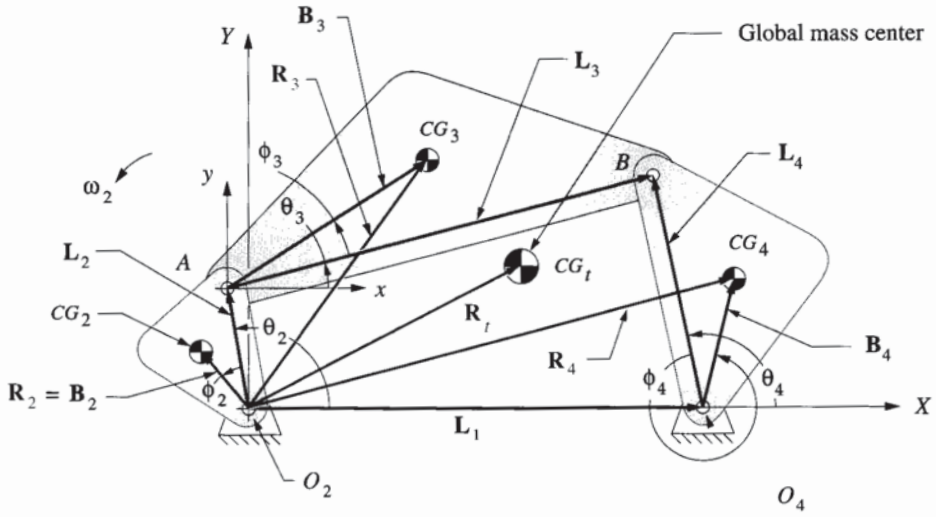

FIGURE 12-4

Static (force) balancing a fourbar linkage

and from the linkage geometry:

$$\begin{aligned}
\mathbf{R}_2 &= b_2\, e^{j(\theta_2+\phi_2)} = b_2\, e^{j\theta_2} e^{j\phi_2} \\
\mathbf{R}_3 &= l_2\, e^{j\theta_2} + b_3\, e^{j(\theta_3+\phi_3)} = l_2\, e^{j\theta_2} + b_3\, e^{j\theta_3} e^{j\phi_3} \\
\mathbf{R}_4 &= l_1\, e^{j\theta_1} + b_4\, e^{j(\theta_4+\phi_4)} = l_1\, e^{j\theta_1} + b_4\, e^{j\theta_4} e^{j\phi_4}
\end{aligned} \tag{12.5d}$$

We can solve for the location of the global mass center for any link position for which we know the link angles θ_2, θ_3, θ_4. We want to make this position vector $\mathbf{R}_t$ be a constant. The first step is to substitute equations 12.5d into 12.5b,

$$m_t\mathbf{R}_t = m_2\left(b_2\, e^{j\theta_2} e^{j\phi_2}\right) + m_3\left(l_2\, e^{j\theta_2} + b_3\, e^{j\theta_3} e^{j\phi_3}\right) + m_4\left(l_1\, e^{j\theta_1} + b_4\, e^{j\theta_4} e^{j\phi_4}\right) \tag{12.5e}$$

and rearrange to group the constant terms as coefficients of the time-dependent terms:

$$m_t\mathbf{R}_t = \left(m_4 l_1\, e^{j\theta_1}\right) + \left(m_2 b_2 e^{j\phi_2} + m_3 l_2\right) e^{j\theta_2} + \left(m_3 b_3\, e^{j\phi_3}\right) e^{j\theta_3} + \left(m_4 b_4\, e^{j\phi_4}\right) e^{j\theta_4} \tag{12.5f}$$

Note that the terms in parentheses are all constant with time. The only time-dependent terms are the ones containing θ_2, θ_3, and θ_4.

We can also write the vector loop equation for the linkage,

$$l_2\, e^{j\theta_2} + l_3\, e^{j\theta_3} - l_4\, e^{j\theta_4} - l_1\, e^{j\theta_1} = 0 \tag{12.6a}$$

and solve it for one of the unit vectors that define a link direction, say link 3:

$$e^{j\theta_3} = \frac{\left(l_1\, e^{j\theta_1} - l_2\, e^{j\theta_2} + l_4\, e^{j\theta_4}\right)}{l_3} \tag{12.6b}$$

Substitute this into equation 12.5f to eliminate the θ_3 term and rearrange:

$$m_t\mathbf{R}_t = \left(m_2 b_2 e^{j\phi_2} + m_3 l_2\right)e^{j\theta_2} + \frac{1}{l_3}\left(m_3 b_3 e^{j\phi_3}\right)\left(l_1 e^{j\theta_1} - l_2 e^{j\theta_2} + l_4 e^{j\theta_4}\right) + \left(m_4 b_4 e^{j\phi_4}\right)e^{j\theta_4} + \left(m_4 l_1 e^{j\theta_1}\right) \quad (12.7a)$$

and collect terms:

$$m_t\mathbf{R}_t = \left(m_2 b_2 e^{j\phi_2} + m_3 l_2 - m_3 b_3 \frac{l_2}{l_3} e^{j\phi_3}\right)e^{j\theta_2} + \left(m_4 b_4 e^{j\phi_4} + m_3 b_3 \frac{l_4}{l_3} e^{j\phi_3}\right)e^{j\theta_4} + m_4 l_1 e^{j\theta_1} + m_3 b_3 \frac{l_1}{l_3} e^{j\phi_3} e^{j\theta_1} \quad (12.7b)$$

This expression gives us the tool to force $\mathbf{R}_t$ to be a constant and make the linkage mass center stationary. For that to be so, the terms in parentheses which multiply the only two time-dependent variables, θ_2 and θ_4, must be forced to be zero. (The fixed link angle θ_1 is a constant.) Thus the requirement for linkage force balance is:

$$\left(m_2 b_2 e^{j\phi_2} + m_3 l_2 - m_3 b_3 \frac{l_2}{l_3} e^{j\phi_3}\right) = 0$$
$$\left(m_4 b_4 e^{j\phi_4} + m_3 b_3 \frac{l_4}{l_3} e^{j\phi_3}\right) = 0 \quad (12.8a)$$

Rearrange to isolate one link's terms (say link 3) on one side of each of these equations:

$$m_2 b_2 e^{j\phi_2} = m_3\left(b_3 \frac{l_2}{l_3} e^{j\phi_3} - l_2\right)$$
$$m_4 b_4 e^{j\phi_4} = -m_3 b_3 \frac{l_4}{l_3} e^{j\phi_3} \quad (12.8b)$$

We now have two equations involving three links. The parameters for anyone link can be assumed and the other two solved for. A linkage is typically first designed to satisfy the required motion and packaging constraints before this force balancing procedure is attempted. In that event, the link geometry and masses are already defined, at least in a preliminary way. A useful strategy is to leave the link 3 mass and CG location as originally designed and calculate the necessary masses and CG locations of links 2 and 4 to satisfy these conditions for balanced forces. Links 2 and 4 are in pure rotation, so it is straightforward to add counterweights to them in order to move their CGs to the necessary locations. With this approach, the right sides of equations 12.8b are reducible to numbers for a designed linkage. We want to solve for the mass radius products $m_2 b_2$ and $m_4 b_4$ and also for the angular locations of the CGs within the links. Note that the angles ϕ_2 and ϕ_4 in equation 12.8 are measured with respect to the lines of centers of their respective links.

Equations 12.8b are vector equations. Substitute the Euler identity (equation 4.4a, p. 155) to separate into real and imaginary components, and solve for the x and y components of the mass-radius products.

$$(m_2 b_2)_x = m_3\left(b_3 \frac{l_2}{l_3}\cos\phi_3 - l_2\right)$$
$$(m_2 b_2)_y = m_3\left(b_3 \frac{l_2}{l_3}\sin\phi_3\right) \tag{12.8c}$$

$$(m_4 b_4)_x = -m_3 b_3 \frac{l_4}{l_3}\cos\phi_3$$
$$(m_4 b_4)_y = -m_3 b_3 \frac{l_4}{l_3}\sin\phi_3 \tag{12.8d}$$

These components of the *mR* product needed to force balance the linkage represent the entire amount needed. If links 2 and 4 are already designed with some individual unbalance (the CG not at pivot), then the existing *mR* product of the unbalanced link must be subtracted from that found in equations 12.8c and 12.8d in order to determine the size and location of additional counterweights to be added to those links. As we did with the balance of rotating links, any combination of mass and radius that gives the desired product is acceptable. Use equations 12.2d and 12.2e to convert the cartesian *mR* products in equations 12.8c and 12.8d to polar coordinates in order to find the magnitude and angle of the counterweight's *mR* vector. Note that the angle of the *mR* vector for each link will be referenced to that link's line of centers. Design the shape of the physical counterweights to be put on the links as discussed in Section 12.1 (p. 571).

12.4 EFFECTOF BALANCING ON SHAKING AND PIN FORCES

Figure 12-5 shows a fourbar linkage* to which balance masses have been added in accord with equations 12.8. Note the counterweights placed on links 2 and 4 at the calculated locations for complete force balance. Figure 12-6a shows a polar plot of the shaking forces of this linkage without the balance masses. The maximum is 462 Ib at 15°. Figure 12-6b shows the shaking forces after the balance masses are added. The shaking forces are reduced to essentially zero. The small residual forces seen in Figure 12-6b are due to computational round-off errors-the method gives theoretically exact results.

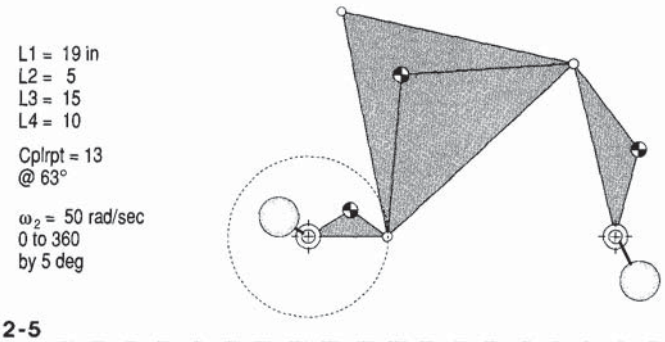

FIGURE 12-5
A balanced fourbar linkage showing balance masses applied to links 2 and 4

* Open the disk file F12-05.4br in program FOURBAR to see more detail on this linkage and its balancing.

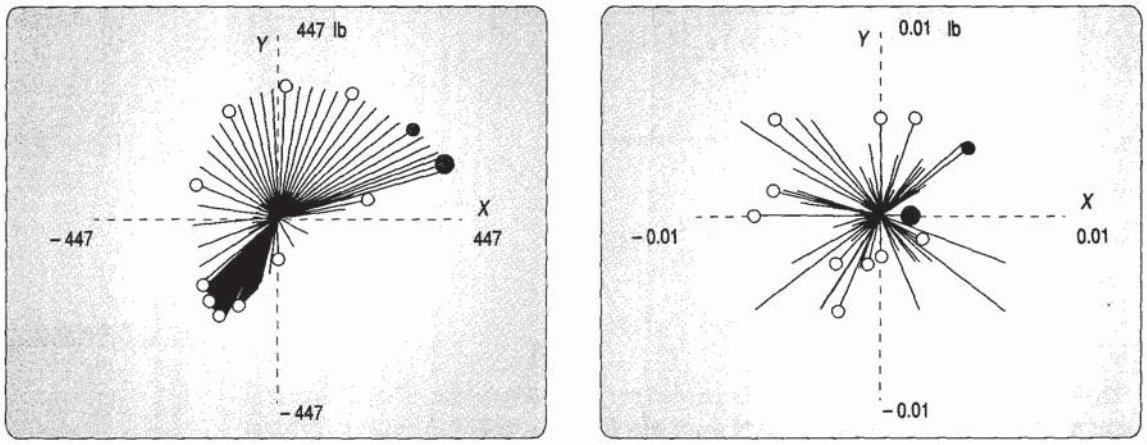

(*a*) Shaking force with linkage unbalanced (*b*) Shaking force with linkage balanced

FIGURE 12-6

Polar plot of unbalanced shaking forces on ground plane of the fourbar linkage of Figure 12-5

The pin forces at the crank and rocker pivots have not disappeared as a result of adding the balance masses, however. Figures 12-7a and 12-7b, respectively, show the forces on crank and rocker pivots after balancing. These forces are now equal and opposite. After balancing, the pattern of forces at pivot O_2 is the mirror image of the pattern at pivot O_4. The **net shaking force** is the vector sum of these two sets of forces for each time step (Section 11.8, p. 544). The equal and opposite pairs of forces acting at the

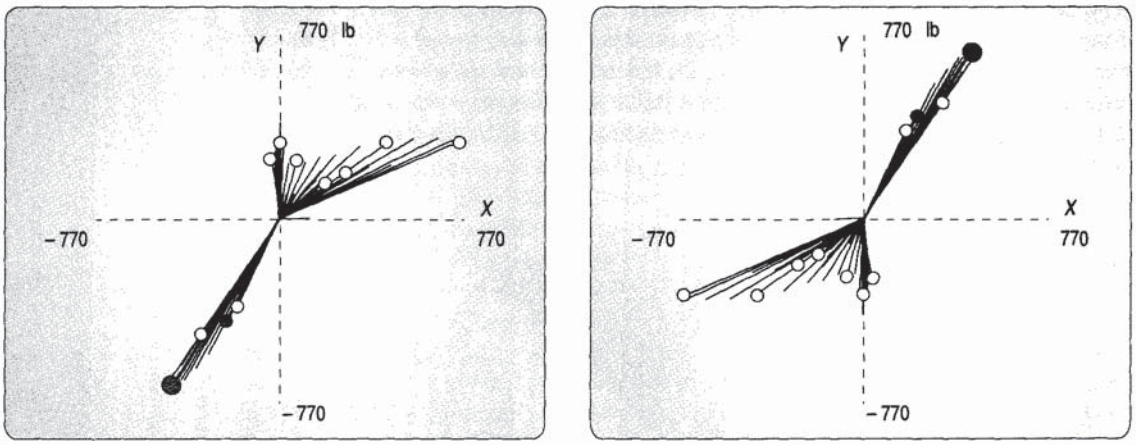

(*a*) Crank pivot force F21 (*b*) Rocker pivot force F41

FIGURE 12-7

Polar plots of forces F21 and F41 acting on the ground plane of the force-balanced fourbar linkage of Figure 12-5

ground pivots at each time step create a time-varying shaking couple that rocks the ground plane. These pin forces can be larger due to the balance weights and if so will increase the shaking couple compared to its former value in the unbalanced linkage-one trade-off for reducing the shaking forces to zero. The stresses in the links and pins may also increase as a result of force-balancing.

12.5 EFFECTOF BALANCING ON INPUT TORQUE

Individually balancing a link which is in pure rotation by the addition of a counterweight will have the side effect of increasing its mass moment of inertia. The "flywheel effect" of the link is increased by this increase in its moment of inertia. Thus the torque needed to accelerate that link will be greater. The input torque will be unaffected by any change in the I of the input crank when it is run at constant angular velocity. But, any rockers in the mechanism will have angular accelerations even when the crank does not. Thus, individually balancing the rockers will tend to increase the required input torque even at constant input crank velocity.

Adding counterweights to the rotating links, necessary to force balance the entire linkage, both increases the links mass moment of inertia and also (individually) *unbalances* those rotating links in order to gain the global balance. Then the CGs of the rotating links will not be at their fixed pivots. Any angular acceleration of these links will add to the torque loading on the linkage. Balancing an entire linkage by this method then can have the side effect of increasing the variation in the required input torque. A larger flywheel may be needed on a balanced linkage in order to achieve the same coefficient of fluctuation as the unbalanced version of the linkage.

Figure 12-8 shows the input torque curve for the unbalanced linkage and for the same linkage after complete force-balancing has been done. The peak value of the required input torque has increased as a result of force-balancing.

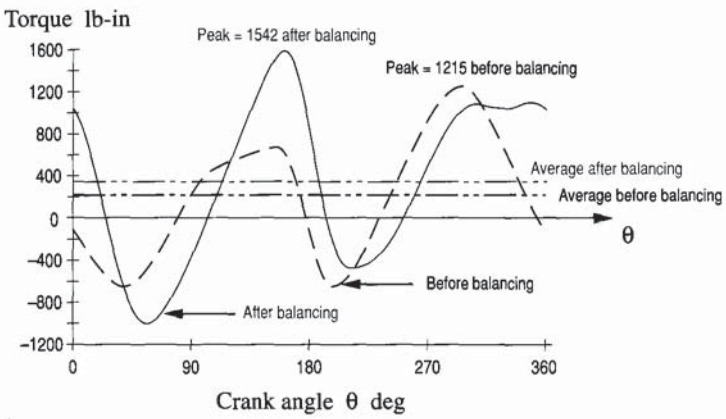

FIGURE 12-8

Unbalanced and balanced input torque curves for the fourbar linkage of Figure 12-5

Note, however, that the degree of increase in the input torque due to force-balancing is dependent upon the choice of radii at which the balance masses are placed. The extra mass moment of inertia that the balance mass adds to a link is proportional to the square of the radius to the CG of the balance mass. The force balance algorithm only computes the required mass-radius product. Placing the balance mass at as small a radius as possible will minimize the increase in input torque. Weiss and Fenton [5J have shown that a circular counterweight placed tangent to the link's pivot center (Figure 12-9) is a good compromise between added weight and increased moment of inertia. To reduce the torque penalty further, one could also choose to do less than a complete force balance and accept some shaking force in trade.

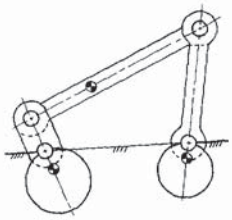

FIGURE 12-9
An inline fourbar linkage (6) with optimally located circular counterweights. (5)

12.6 BALANCING THE SHAKING MOMENT IN LINKAGES

The shaking moment M_s in a force-balanced linkage is the sum of the reaction torque T_{21} and the shaking couple (ignoring any externally applied loads).[6]*

$$M_s = T_{21} + (R_1 \times F_{41}) \tag{12.9}$$

where *TZI* is the negative of the driving torque *T12' RI* is the position vector from *Oz* to *04* (i.e., link 1), and *F41* is the force of the rocker on the ground plane. In a general linkage, the magnitude of the shaking moment can be reduced but cannot be eliminated by means of mass redistribution within its links. Complete balancing of the shaking moment requires the addition of supplementary links and then only works for certain special configurations of a fourbar linkage.[7]

Many techniques have been developed that use optimization methods to find a linkage mass configuration that will minimize the shaking moment alone or in combination with minimizing shaking force and/or input torque. Hockey [8J, [9J shows that the fluctuation in kinetic energy and input torque of a mechanism may be reduced by proper distribution of mass within its links and that this approach is more weight efficient than adding a flywheel to the input shaft. Berkof [10] also describes a method to minimize the input torque by internal mass rearrangement. Lee and Cheng [11] and Qi and Pennestri [1zJ show methods to optimally balance the combined shaking force, shaking moment, and input torque in high-speed linkages by mass redistribution and addition of counterweights. Porter [13] suggests using a genetic algorithm to optimize the same set of parameters. Bagci [14J describes several approaches to balancing shaking forces and shaking moments in the fourbar slider-crank linkage. Most of these methods require significant computing resources, and space does not permit a complete discussion of them all here. The reader is directed to the references for more information.

Berkofs method for complete moment balancing of the fourbar linkage [7]is simple and useful even though it is limited to "inline" linkages, i.e., those whose link CGs lie on their respective link centerlines as shown in Figure 12-9. This is not an overly restrictive constraint since many practical linkages are made with straight links. Even if a link must have a shape that deviates from its line of centers, its CG can still be placed on that line by adding mass to the link in the proper location, increased weight being the trade-off.

For complete moment balancing, in addition to being an inline linkage, the coupler must be reconfigured to become a physical pendulum such that it is dynamically equivalent to a lumped mass model as shown in Figure 12-10. The coupler is shown in Figure

* Note that this statement is only true if the linkage is force balanced which makes the moment of the shaking couple a free vector. Otherwise it is referenced to the chosen global coordinate system. See reference [6] for complete derivations of the shaking moment for both force-balanced and unbalanced linkages.

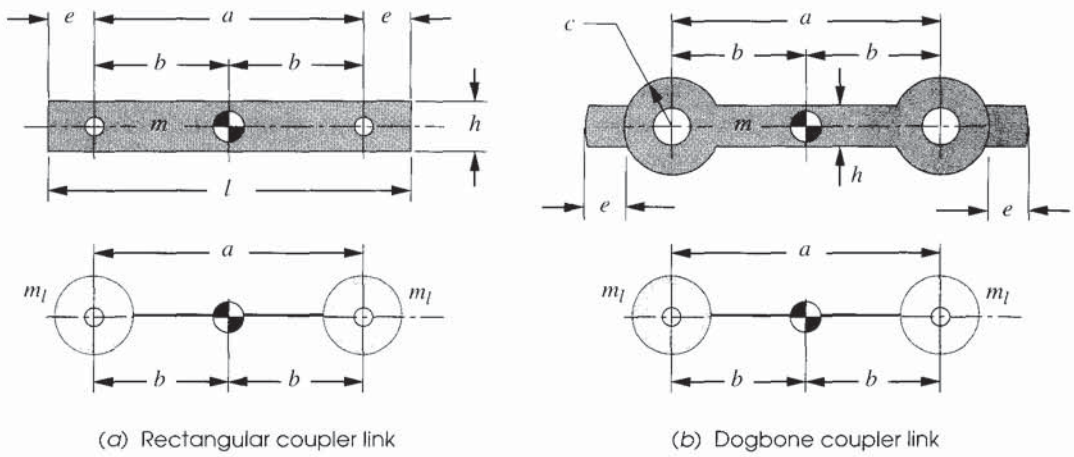

(a) Rectangular coupler link (b) Dogbone coupler link

FIGURE 12-10

Making the coupler link a physical pendulum

12-10a as a uniform rectangular bar of mass m, length a and width h and in Figure 12-10b as a "dogbone." These are only two of many possibilities. We want the lumped masses to be at the pivot pins, connected by a "massless" rod. Then the coupler's lumped masses will be in pure rotation either as part of the crank or as part of the rocker.* This can be accomplished by adding mass as indicated by dimension e at the coupler ends.

The three requirements for dynamic equivalence were stated in Section 10.2 (p. 492) and are: equal mass, same CG location, and same mass moment of inertia. The first and second of these are easily satisfied by placing $m_l = m/2$ at each pin. The third requirement can be stated in terms of radius of gyration k instead of moment of inertia using equation 10.10 (p. 498).

$$k = \sqrt{\frac{I}{m}} \tag{12.10}$$

Taking each lump separately as if the massless rod were split at the CG into two rods each of length b, the moment of inertia I_l of each lump will be

$$I_l = \frac{I}{2} = m_l b^2$$

and

$$I = 2m_l b^2 = mb^2 \tag{12.11a}$$

then

$$k = \sqrt{\frac{mb^2}{m}} = b = \frac{a}{2} \tag{12.11b}$$

For the link configuration in Figure 12-10a, this will be satisfied if the link dimensions have the following dimensionless ratios.

$$\frac{e}{h} = \frac{1}{2}\sqrt{3\left(\frac{a}{h}\right)^2 - 1} - \frac{a}{2h} \tag{12.12a}$$

* Note that this arrangement also makes each pin joint the center of percussion for the other pin as the center of rotation. This means that a force applied at either pin will have a zero reaction force at the other pin, effectively decoupling them dynamically. See Section 10.8 (p. 498) and also Figure 13-10 (p. 616) for further discussion of this effect.

$$\frac{l}{h}=\frac{a}{h}+2\frac{e}{h} \tag{12.12b}$$

where e defines the length of the material that must be added at each end to satisfy equation 12.11b.

For the link configuration in Figure 12-10b, the length e of the added material of width h needed to make it a physical pendulum can be found from

$$A\left(\frac{e}{h}\right)^3+B\left(\frac{e}{h}\right)^2+C\left(\frac{e}{h}\right)+D=0 \tag{12.13}$$

where:

$$A=8$$

$$B=12\left(\frac{a}{c}\right)+24$$

$$C=24\left(\frac{a}{c}\right)+26$$

$$D=-2\left(\frac{a}{c}\right)^3+13\left(\frac{a}{c}\right)+12\pi-10$$

The second step is to force balance the linkage with its modified coupler using the method of Section 12.3 (p.579) and define the required counterweights on links 2 and 4. With the shaking forces eliminated, the shaking moment is a free vector, as is the input torque.

Then as the third step, the shaking moment can be counteracted by adding geared inertia counterweights to links 2 and 4 as shown in Figure 12-11. These must turn in the opposite direction to the links, so they require a gear ratio of –1. Such an inertia coun-

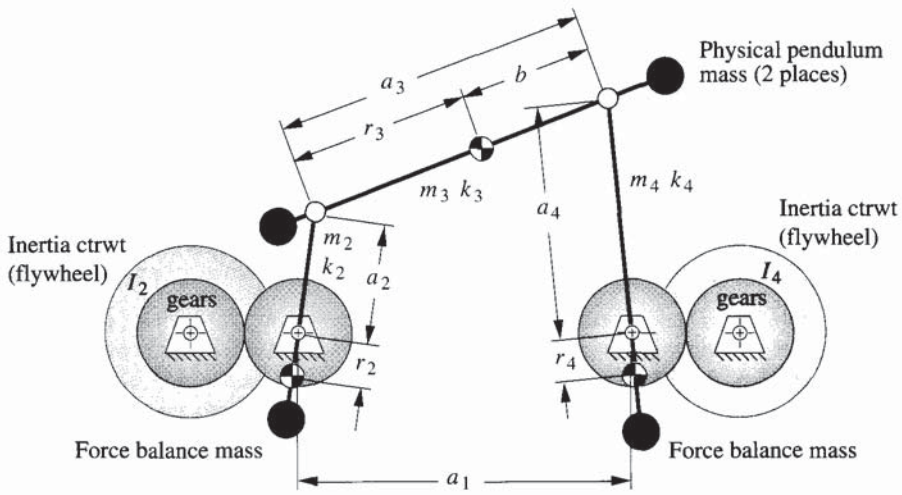

FIGURE 12-11

Completely force and moment balanced inline fourbar linkage with physical pendulum coupler and inertia counterweights on rotating links

terweight can balance any planar moment that is proportional to an angular acceleration and does not introduce any net inertia, forces to upset the force balance of the linkage. Trade-offs include increased input torque and larger pin forces resulting from the torque required to accelerate the additional rotational inertia. There can also be large loads on the gear teeth and impact when torque reversals take up the gearsets' backlash, causing noise.

The shaking moment of an inline fourbar linkage is derived in reference [6] as

$$M_s = \sum_{i=2}^{4} A_i \alpha_i \tag{12.14}$$

where:

$$A_2 = -m_2\left(k_2^2 + r_2^2 + a_2 r_2\right)$$
$$A_3 = -m_3\left(k_3^2 + r_3^2 - a_3 r_3\right)$$
$$A_4 = -m_4\left(k_4^2 + r_4^2 + a_4 r_4\right)$$

α_i is the angular acceleration of link i. The other variables are defined in Figure 12-11.

Adding the effects of the two inertia counterweights gives

$$M_s = \sum_{i=2}^{4} A_i \alpha_i + I_2 \alpha_2 + I_4 \alpha_4 \tag{12.15}$$

The shaking moment can be forced to zero if

$$I_2 = -A_2$$
$$I_4 = -A_4 \tag{12.16}$$
$$A_3 = 0, \quad \text{or} \quad k_3^2 = r_3\left(a_3 - r_3\right)$$

This leads to a set of five design equations that must be satisfied for complete force and moment balancing of an inline fourbar linkage.

$$m_2 r_2 = m_2 b\left(\frac{a_2}{a_3}\right) \tag{12.17a}$$

$$m_4 r_4 = m_3 r_3\left(\frac{a_4}{a_3}\right) \tag{12.17b}$$

$$k_3^2 = r_3 b \tag{12.17c}$$

$$I_2 = m_2\left(k_2^2 + r_2^2 + a_2 r_2\right) \tag{12.17d}$$

$$I_4 = m_4\left(k_4^2 + r_4^2 + a_4 r_4\right) \tag{12.17e}$$

Equations 12.17a and 12.17b are the force-balance criteria of equation 12.8 written for the inline linkage case. Equation 12.17c defines the coupler as a physical pendulum. Equations 12.17d and 12.17e define the mass moments of inertia required for the two inertia counterweights. Note that if the linkage is run at constant angular velocity, a2 will be zero in equation 12.14 and the inertia counterweight on link 2 can be omitted.

12.7 MEASURING AND CORRECTING IMBALANCE

While we can do a great deal to ensure balance when designing a machine, variations and tolerances in manufacturing will preclude even a well-balanced design from being in perfect balance when built. Thus there is need for a means to measure and correct the imbalance in rotating systems. Perhaps the best example assembly to discuss is that of the automobile tire and wheel, with which most readers will be familiar. Certainly the design of this device promotes balance, as it is essentially cylindrical and symmetrical. If manufactured to be perfectly uniform in geometry and homogeneous in material, it should be in perfect balance as is. But typically it is not. The wheel (or rim) is more likely to be close to balanced, as manufactured, than is the tire. The wheel is made of a homogeneous metal and has fairly uniform geometry and cross section. The tire, however, is a composite of synthetic rubber elastomer and fabric cord or metal wire. The whole is compressed in a mold and steam-cured at high temperature. The resulting material varies in density and distribution, and its geometry is often distorted in the process of removal from the mold and cooling.

STATIC BALANCING After the tire is assembled to the wheel, the assembly must be balanced to reduce vibration at high speeds. The simplest approach is to statically balance it, though it is not really an ideal candidate for this approach as it is thick axially compared to its diameter. To do so it is typically suspended in a horizontal plane on a cone through its center hole. A bubble level is attached to the wheel, and weights are placed at positions around the rim of the wheel until it sits level. These weights are then attached to the rim at those points. This is a single-plane balance and thus can only cancel the unbalanced forces. It has no effect on any unbalanced moments due to uneven distribution of mass along the axis of rotation. It also is not very accurate.

DYNAMIC BALANCING The better approach is to dynamically balance it. This requires a dynamic balancing machine be used. Figure 12-12 shows a schematic of such a device used for balancing wheels and tires or any other rotating assembly. The assembly to be balanced is mounted temporarily on an axle, called a mandrel, which is supported in bearings within the balancer. These two bearings are each mounted on a suspension which contains a transducer that measures dynamic force. A common type of force transducer contains a piezoelectric crystal which delivers a voltage proportional to the force applied. This voltage is amplified electronically and delivered to circuitry or software which can compute its peak magnitude and the phase angle of that peak with respect to some time reference signal. The reference signal is supplied by a shaft encoder on the mandrel which provides a short duration electrical pulse once per revolution in exactly the same angular location. This encoder pulse triggers the computer to begin processing the force signal. The encoder may also provide some large number of additional pulses equispaced around the shaft circumference (often 1024). These are used to trigger the recording of each data sample from the transducers in exactly the same location around the shaft and to provide a measure of shaft velocity via an electronic counter.

The assembly to be balanced is then "spun up" to some angular velocity, usually with a friction drive contacting its circumference. The drive torque is then removed and the drive motor stopped, allowing the assembly to "freewheel." (This is to avoid measuring any forces due to imbalances in the drive system.) The measuring sequence is begun, and the dynamic forces at each bearing are measured simultaneously and their waveforms stored. Many cycles can be measured and averaged to improve the quality

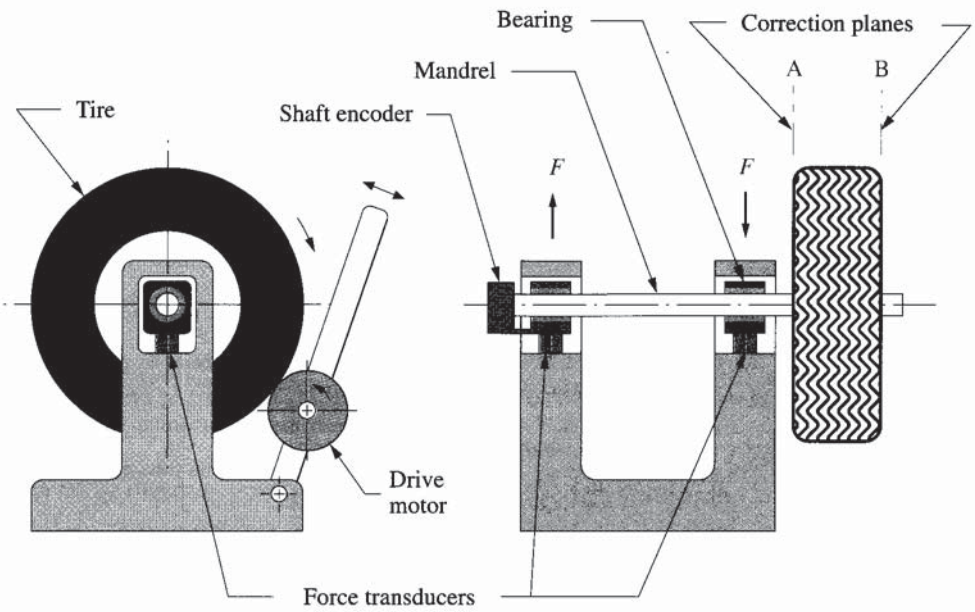

FIGURE 12-12
A dynamic wheel balancer

of the measurement. Because forces are being measured at two locations displaced along the axis, both summation of moment and summation of force data are computed.

The force signals are sent to a built-in computer for processing and computation of the needed balance masses and locations. The data needed from the measurements are the magnitudes of the peak forces and the angular locations of those peaks with respect to the shaft encoder's reference angle (which corresponds to a known point on the wheel). The axial locations of the wheel rim's inside and outside edges (the correction planes) with respect to the balance machine's transducer locations are provided to the machine's computer by operator measurement. From these data the net unbalanced force and net unbalanced moment can be calculated since the distance between the measured bearing forces is known. The mass-radius products needed in the correction planes on each side of the wheel can then be calculated from equations 12.3 (p. 574) in terms of the mR product of the balance weights. The correction radius is that of the wheel rim. The balance masses and angular locations are calculated for each correction plane to put the system in dynamic balance. Weights having the needed mass are clipped onto the inside and outside wheel rims (which are the correction planes in this case), at the proper angular locations. The result is a fairly accurately dynamically balanced tire and wheel.

12.8 REFERENCES

1 **Lowen, G. G., and R. S. Berkof**. (1968). "Survey of Investigations into the Balancing of Linkages." *J. Mechanisms*, **3**(4), pp. 221-231.

2 **Lowen, G. G., et al.** (1983). "Balancing of Linkages—An Update." *Journal of Mechanism and Machine Theory*, **18**(3), pp. 213-220.