Density and porosity

Asst. Prof. Dr. Sirirat T. Rattanachan

Density and porosity

Density: terms
- Bulk density
- True density
- Theoretical density
- Apparent density

Porosity: terms
- Total porosity
- Open porosity
- Close porosity

Bulk density

- Bulk density = อัตราส่วนมวลรวมต่อปริมาตรที่รวมรูพรุนด้วย หรือ ปริมาตรจำเพาะ
- Bulk density ของชิ้น Ceramic มักเป็นปริมาตรที่มีรูพรุนด้วย ซึ่งรวมรูพรุนแบบเปิด และแบบปิด (bulk volume/external volume)
- Bulk density ≠ True density

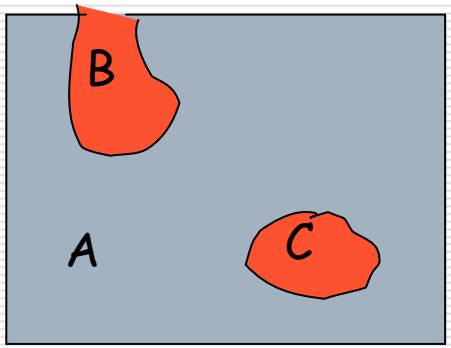

$$\text{Bulk density} = \frac{\text{Mass}}{\text{Total volume } (A + B + C)}$$

Bulk volume = A+B+C
A = solid volume or True volume ~ Theoretical density
B = Open pore volume
C = Closed pore volume
Bulk volume → เวอร์เนีย ในกรณีที่รูปร่างเป็นทางเรขาคณิต

Apparent density ความหนาแน่นปรากฏ

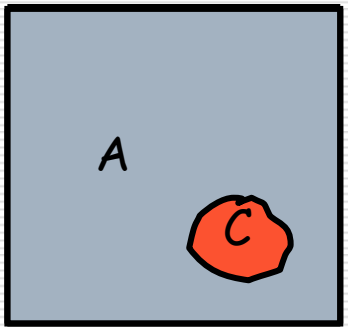

$$\text{Apparent density} = \frac{\text{Mass}}{\text{Apparent volume } (A + C)}$$

Density

$$\text{True density} = \frac{\text{mass}}{\text{true volume}}$$

$$\text{Apparent density} = \frac{\text{mass}}{\text{apparent volume } (A + C)}$$

$$\text{Bulk density} = \frac{\text{mass}}{\text{bulk volume } (A + B + C)}$$

$$\text{Theoretical density} = \frac{\text{mass of a unit cell}}{\text{volume of a unit cell}}$$

Theoretical density

- ความหนาแน่นตามทฤษฎี หรือ TD
- X-ray density ใช้วัดขนาด unit cell และสามารถคำนวณหา unit cell volume ได้
- น้ำหนักอะตอมใน 1 unit cell ต่อ ปริมาตรใน 1 unit cell

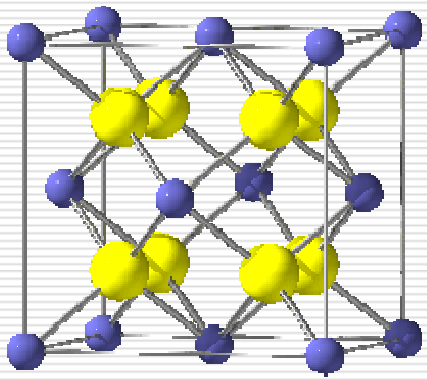

Example : $Zr_{0.85}Ca_{0.15}O_{1.85}$ is Fluorite structure : 4 cation sites, 8 anion sites ($4(ZrO_2)$ / unit cell), unit cell parameter = 5.131 A°

$$TD = \frac{4(0.85\ Zr) + 4(0.15\ Ca) + 4(1.85O)}{6.03x10^{23}(5.131\ A°)^3(10^{-24})}$$

$$= 5.480\ g/cm^3$$

$$\%\ \text{theoretical density} = \frac{\text{bulk density}}{\text{true density}} x100$$

Liquid pycnometer techniques: true density

- ในกรณีใช้น้ำกลั่นเป็นตัวกลาง
- ทำการทดลองที่อุณหภูมิห้องและคงที่

$$\rho = \frac{W_2 - W_1}{(W_4 - W_1) - (W_3 - W_2)}$$

Fig. 1. The Pycnometer

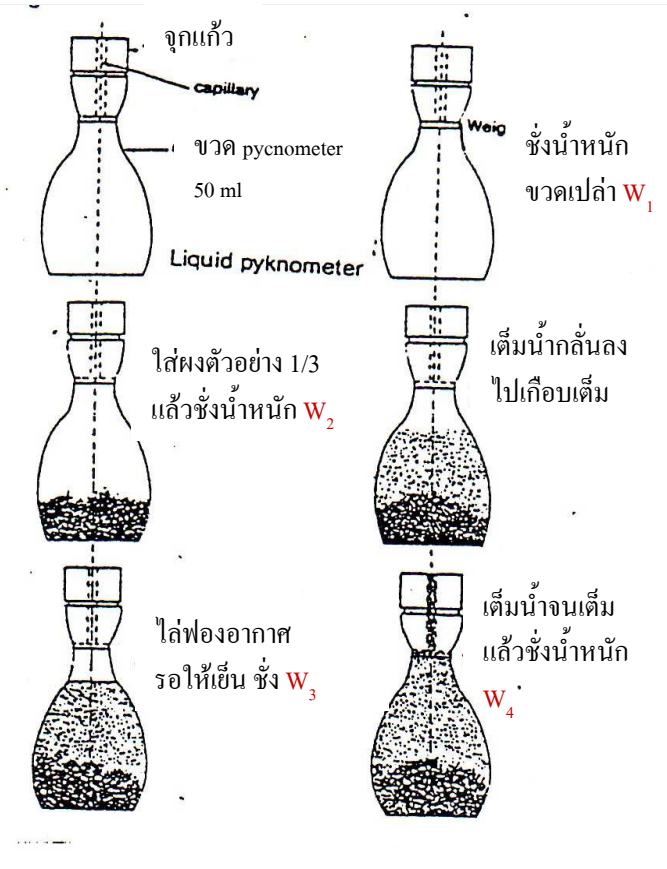

Archimedes method

- Bulk volume
- Bulk density
- Apparent volume
- Apparent density

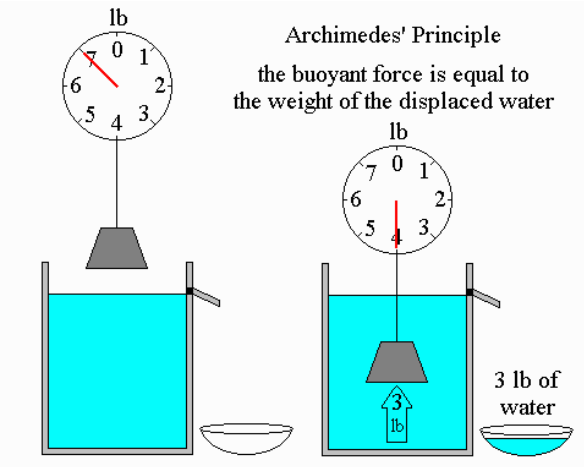

Density ต่างๆ

Apparent solid Volume = ปริมาตรของของแข็งและรูพรุนแบบปิด = the difference between dry weight (D) and the immersed weight (I) of piece.

- S – I = volume of open pores + sealed pores + solid
- S – D = Vol. open pores
- D – I = Vol. of sealed pore + solid

Bulk density

$$\frac{\text{Weight}}{\text{App. Vol.}} = \frac{D}{S - I}$$

True density = $\frac{\text{Weight}}{\text{True Vol.}}$

Apparent solid density = $\frac{\text{Weight}}{\text{App. – solid Vol}} = \frac{D}{D - I}$

Where D = wt. Of dry piece (g)
S = wt. Of soaked piece (g)
I = wt. Of soaked immersed piece (g)

Porosity

- Open pores
- Close pores
- Techniques:
  - Archemedes
  - Instrument

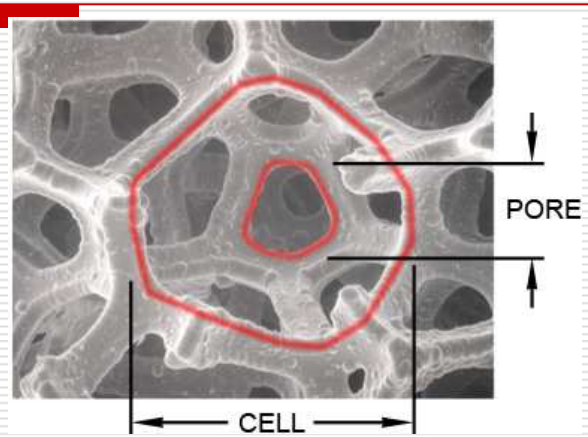

Porosity

รูพรุนเป็นค่าเปรียบเทียบปริมาตรของรูพรุนด้วยปริมาตรหรือน้ำหนักของชิ้นตัวอย่างเอง

Apparent Porosity = Ratio of open pore volume to total volume

$$\% \text{ App. Porosity} = \frac{\text{open pore vol.}}{\text{Total vol.}} \times 100$$

$$= \frac{S - D}{S - I} \times 100$$

Water absorption = Ratio of open pore vol . to weight of the test piece

$$\% \text{ Water absorption} = \frac{\text{open pore vol.}}{\text{wt.}} \times 100$$

$$= \frac{S - D}{D} \times 100$$

True porosity

: All the pores (open and sealed)

$$\% \text{ True Porosity} = \frac{\text{Volume of all pores}}{\text{Total vol. of the test piece}} \times 100$$

$$= \frac{\text{App. Vol} - \text{True vol.}}{\text{App. Vol.}} \times 100$$

$$= \left[1 - \frac{\text{True Vol.}}{\text{App. Vol.}} \times 100 \right]$$

$$\text{True Vol./App. Vol.} = \frac{\frac{weight}{D_t}}{\frac{weight}{D_a}} = \frac{D_a}{D_t} = (1 - \frac{D_a}{D_t})x100$$

where D_a = Apparent density = $\frac{\text{weight}}{\text{App. Vol.}}$

D_t = True density = $\frac{\text{weight}}{\text{True. Vol.}}$

$$\% \text{ True porosity} = 1 - \frac{S_a}{S_t} \times 100$$

- S_a = Apparent specific gravity
- S_t = True specific gravity

Pore volume measurement

- Gas absorption เมื่อ pore มีขนาด < 800A°
- Mercury penetration (Porosimeter techniques) เมื่อขนาด pore > 800 A°

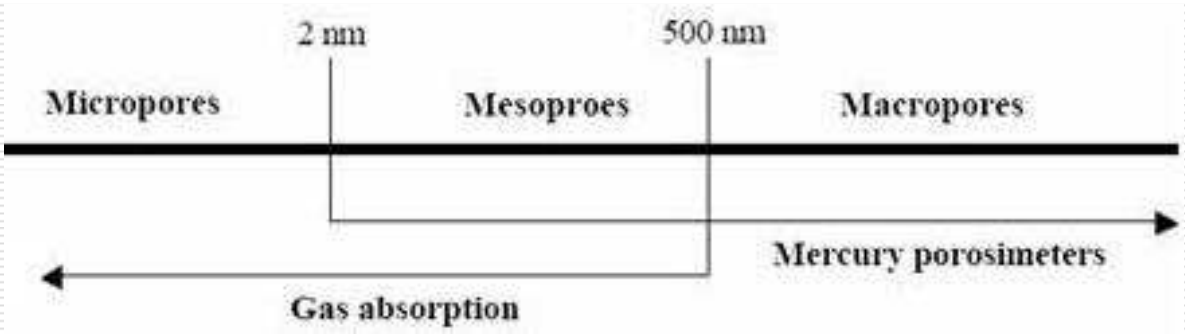

Pore size limits of gas adsorption (BET) and mercury intrusion porosimetry

John I. D'Souzae

Gas adsorption → BET

- จาก monolayer adsorption ใช้ low P/P_0 ratio
- จาก multilayer adsorption ใช้ P/P_0 0.05-0.3
- ถ้า higher pressure gas จะเกิดการ condense กลายเป็นของเหลว P/P_0 0.6-0.99

BET equation

support that gas condense in cylindical capillaries with radius (r) and pressure in capillaries (P),

Kelvin equation

$$\ln \frac{P}{P_0} = \frac{2\gamma_{LV} V_L \cos\theta}{RTr}$$

P_0 = saturated gas pressure of liq. on plane surface

γ_{LV} = surface tension liq.- vapor interface

V_L = molar volume of liquid

θ = contract angle between liq. and pore wall

R = gas constant (8.31 kJ/(K.mol)

T = adsorption temperature

BET equation

N_2 gas, at boil point (77 K)

$$\gamma_{\mathrm{LV}} = 8.72 \text{ x } 10^{-3} \, N/m^2$$

$$V_L = 34.68 \text{ x } 10^{-6} \, m^3/mol$$

$$\theta = 0$$

$$r = \frac{2\gamma_{LV} V_L \cos\theta}{RT \ln P/P_0} = \frac{4.05x10^{-4}}{\log P/P_0} \mu m$$

ถ้าทราบค่า P/P0 สามารถหาค่า r ได้ ค่า P/P0 ที่เหมาะสมคือ 0.6-0.99 จะได้ค่า r 2-100 nm

Mercury porosimeter

- % porosity,
- pore volume distribution,
- pore size distribution,
- surface area distribution,
- particle size distribution,
- bulk and apparent density.

Phenomenon of capillary rise

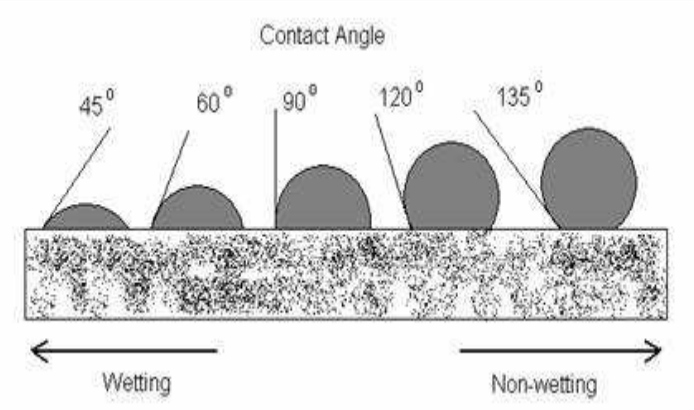

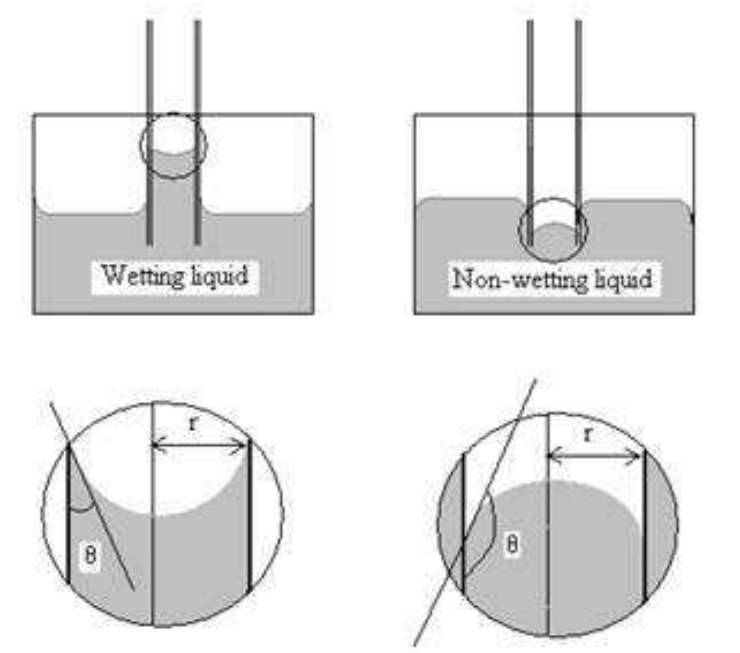

θ = contact angle
Water wet the well
θ < 90° (wetting liq.)

θ = contact angle
Hg wet the well
θ > 90° (non-wetting liq.) → depressed

Mercury porosimeter

- placing a sample into a container,
- evacuating the container to remove contaminant gases and vapors (usually water) and, while still evacuated, allowing mercury to fill the container. (a solid, a non-wetting liquid (mercury), and mercury vapor)
- Next, pressure is increased toward ambient while the volume of mercury entering larger openings in the sample bulk is monitored.
- When pressure has returned to ambient, pores of diameters down to about 12 mm have been filled.
- The sample container is then placed in a pressure vessel for the remainder of the test. A maximum pressure of about 60,000 psia (414 MPa) is typical for commercial instruments and this pressure will force mercury into pores down to about 0.003 mm in diameter.
- The volume of mercury that intrudes into the sample due to an increase in pressure from Pi to Pi_{+1} is equal to the volume of the pores in the associated size range ri to ri_{+1}, sizes being determined by substituting pressure values into Washburn's equation.

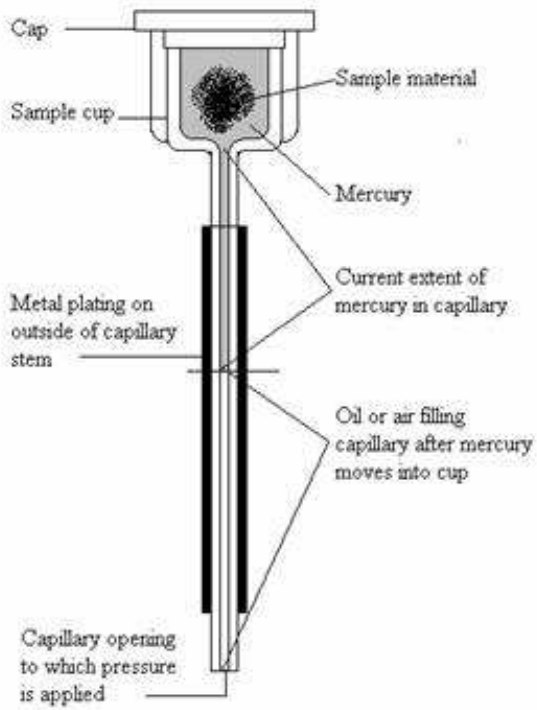

Mercury porosimeter

- **pore diameter**, total **pore volume**, surface area, and bulk and absolute densities.
- The technique involves the intrusion of a non-wetting liquid (often mercury) at high pressure into a material through the use of a **porosimeter**.
- The pore size can be determined based on the external pressure needed to force the liquid into a pore against the opposing force of the liquid's surface tension.
- A known as (Washburn's equation) for the above material having cylindrical pores is given as:
  - P_L = pressure of liquid
  - P_G = pressure of gas
  - σ = surface tension of liquid
  - θ = contact angle of intrusion liquid
  - D_P = pore diameter

$$P_L - P_G = \frac{4\rho\cos\theta}{D_P}$$

Mercury porosimeter

Since the technique is usually done under vacuum, the gas pressure begins at zero. The contact angle of mercury with most solids is between 135° and 142°, so an average of 140° can be taken without much error. The surface tension of mercury at 20 °C under vacuum is 480 mN/m. With the various substitutions, the equation becomes:

$$D_P = \frac{213}{P_L}$$

As pressure increases, so does the cumulative pore volume. From the cumulative pore volume, one can find the pressure and pore diameter where 50% of the total volume has been added to give you the median pore diameter.

Nitrogen gas adsorption

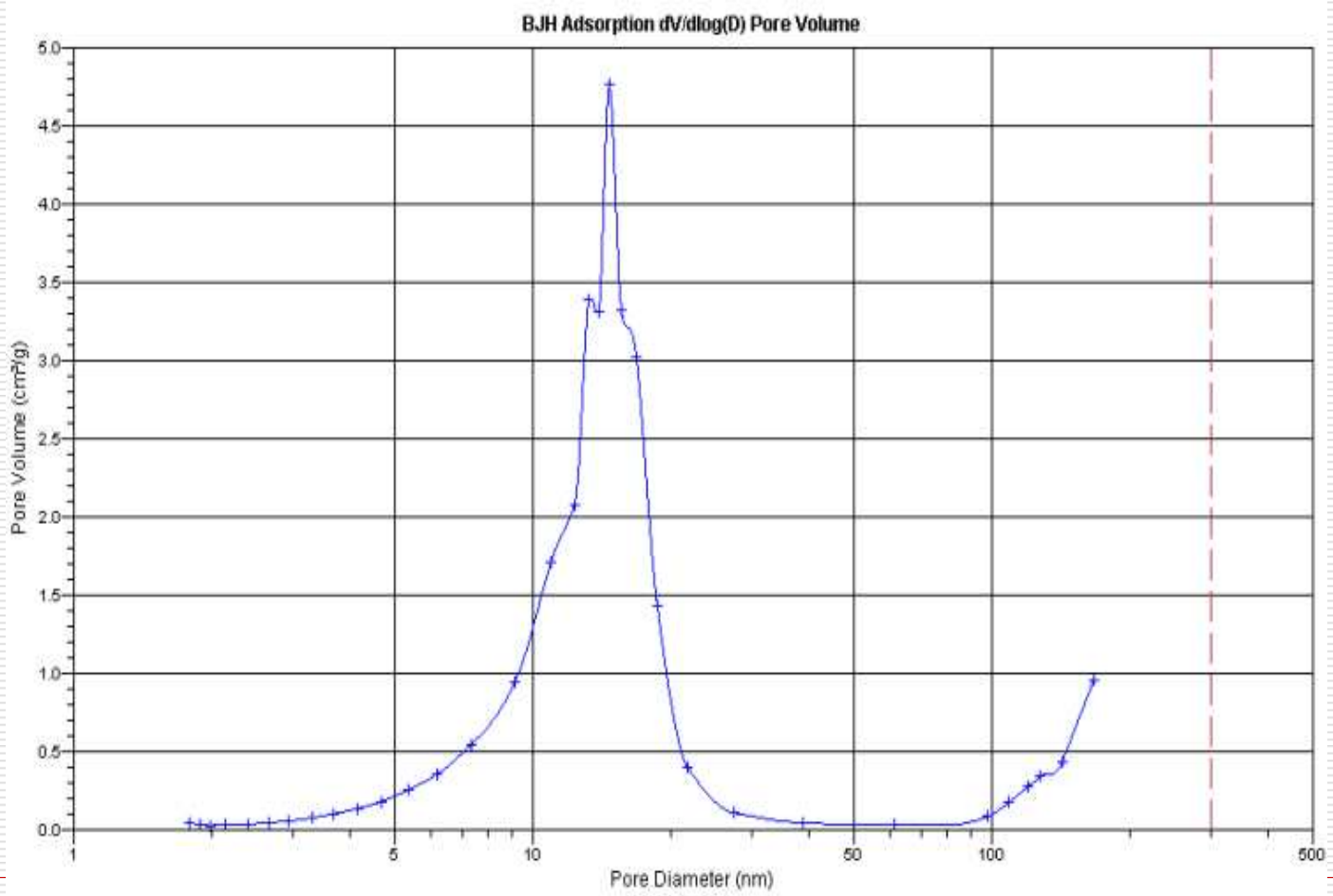

Mercury Porosimeter